PRODUCED BY AN AUTODESK EDUCATIONAL PRODUCT

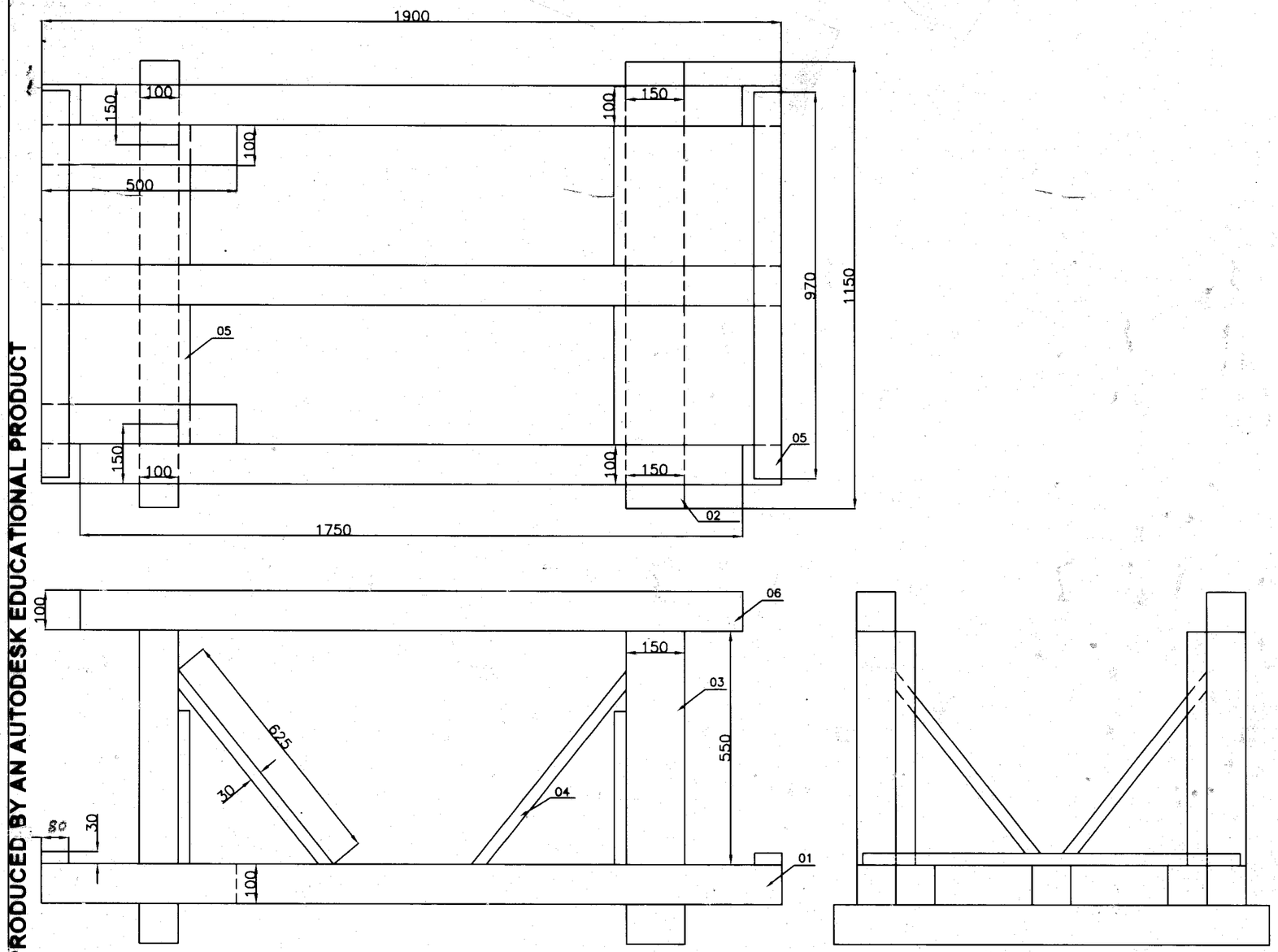

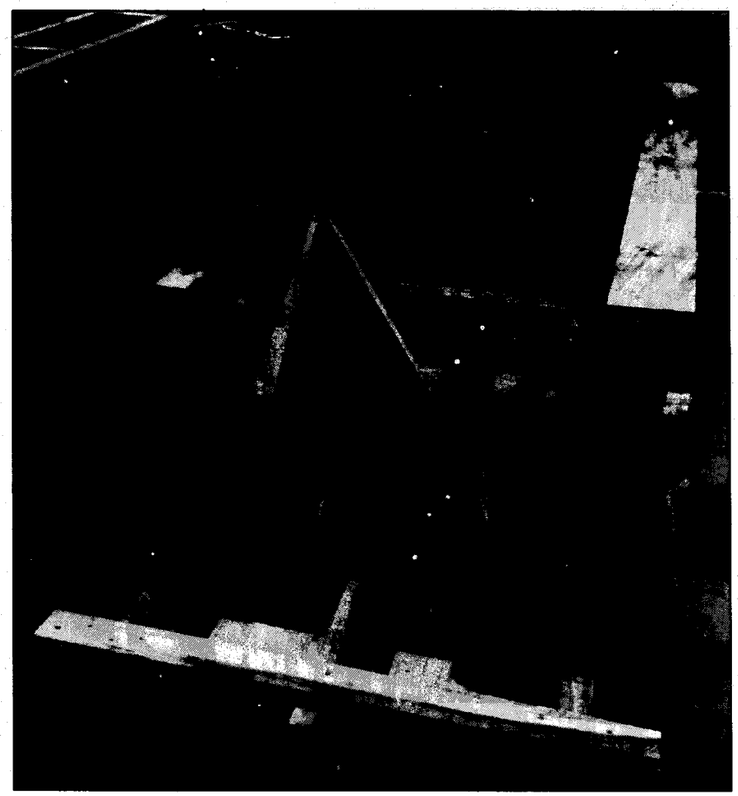

WOODEN SKID IMAGE

NOTE:
1.ALL THE JOINTS SUITABLY NAILED AS PER STANDARD PRACTICE
2.SKID SHOULD BE STURDY TO HANDLE ENGINE WEIGHT,SUITABLE REINFORCEMENT TO BE ADDED AT NECESSARY AREAS

SL.NO	QTY	DESCRIPTION	MATERIAL	SIZE	REMARKS
13	32	HEX NUT	STD	M12	———
12	32	WASHER	STD	M12	———
11	32	HEX HEAD BOLT	STD	M12x180	———
10	24	HEX HEAD BOLT	STD	M12x200	———
09	80	PLANK	WOOD	20x100x1900	FOR SIDE COVER
08	24	PLANK	WOOD	20x100x2000	FOR TOP COVER
07	24	PLANK	WOOD	20x100x1150	FOR FRONT COVER
06	02	PLANK	WOOD	100x100x1750	———
05	06	PLANK	WOOD	50x80x1250	GUSSET
04	02	PLANK	WOOD	30X80X1250	GUSSET
03	04	PLANK	WOOD	100x150x550	———
02	03	PLANK	WOOD	100X150X1150	———
01	03	PLANK	WOOD	100X100X1900	———

AMEND.	NO.	SIGNATURE	DATE
APPROVED		[signature]	20.09.16
REVIEWED			
CHECKED			
DRAWN		B. [signature]	20.09.16
STDS.			

PRODUCT **BEML ENGINE**

DESIGN REF.

USED ON	QTY.
125 ENGINE	

MATERIAL: JUNGLE WOOD

HEAT TREATMENT: ———

Wt.IN Kgs.: ———

SCALE:

TITLE: **WOODEN SKID AND PACKING BOX FOR 125 ENGINE**

SHEET NO. 1

NO.OF SHEETS 1

Bharat Earth Movers Ltd., Engine Division, Mysore.

DRG.NO. 80-04-9-0221-5

PRODUCED BY AN AUTODESK EDUCATIONAL PRODUCT
PRODUCED BY AN AUTODESK EDUCATIONAL PRODUCT
PRODUCED BY AN AUTODESK EDUCATIONAL PRODUCT